DREAMSCAPE LIGHTING FLUSH TRIM / TRIMLESS SPECIFICATION SHEET

DREAMSCAPE 50W 1 LIGHT SPLAY RECESSED TRIM

LAMPING: 1 x 50 watt max.

☐ **Cat. No.: DL-7200-_____-_____-_____**

☐ **Cat. No.: DL-7200 FT-_____-_____-_____**

Type: _____

Project: _____

Date: _____

Trim Description:

Recessed 1-light 50W regressed splay trim. Allows for 45° vertical adjustment with 365° horizontal rotation. Trim blends smoothly into ceiling plane with Dreamscape Lighting patented Flush Trim mounting collar. For use with Dreamscape Lighting DL-7001 Non-IC and DL-7005-IC and IC-AT Housings. Trim accepts both a louver and lens. See accessories below. **All trims can be flush mounted utilizing Dreamscape's patented flush mount / trimless system. Specify suffix FT.**

Mechanical:

Fixture housing is 18 ga. CRS and features two 16 ga. adjustable steel hanger bars which can be extended to 23.5". Access below ceiling. Ceiling trim flange is provided with .5" plaster lip with centerline notches for precise trim alignment.

Electrical:

Housing is ETL listed for through branch circuit wiring. Housing features integral Q-Tran toroidal dimmable transformer. Secondary lead is 12V. Primary lead is 120V. Access above ceiling not required.

Finish:

Standard trim finish is powder coated semi-gloss white. See below for other finishes. Custom finishes available, please consult factory.

Labels

ETL - Suitable for damp location

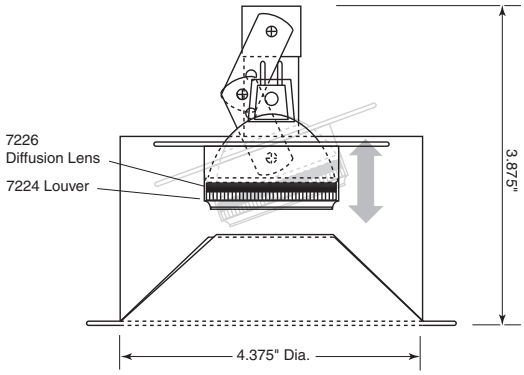

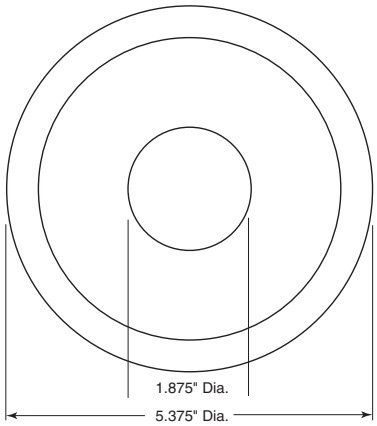

Catalog No.	Finish	Construction	Adjustability	Lamp
DL-7200	White	Powder Coated Steel		
DL-7200A	Alzak®	Alzak Aluminum Splay		
DL-7200-1	Verde	Solid Brass		
DL-7200-2	Satin Nickel	Solid Brass	45° Vertical	MR16
DL-7200-3	Copper Bronze	Solid Brass	365° Horizontal	50W
DL-7200-4	Custom	Custom Powder Coat		
DL-7200-5	Ancient Bronze	Solid Brass		
DL-7200-6	Brass Bronze	Solid Brass		
DL-7200-8	Copper Plate	Solid Brass		

Note: Add suffix FT for DL-7200 Flush Trim application

For Use with the Following Dreamscape Housings

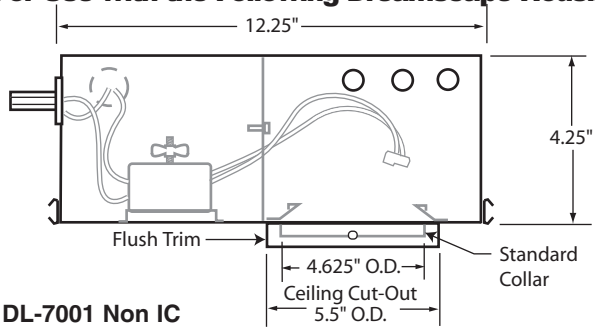

DL-7001 Non IC

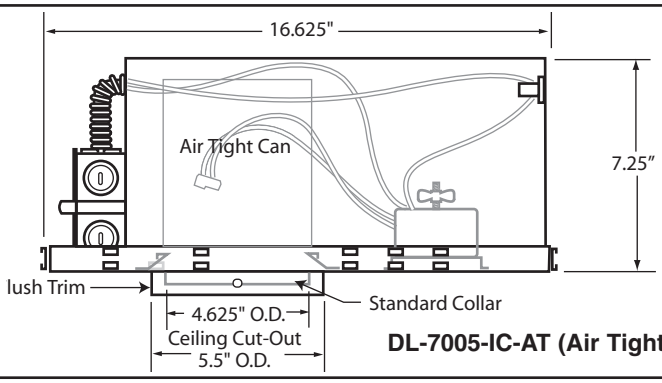

DL-7005-IC-AT (Air Tight)

Beam Accessories: DL-7224: 2" Louver, DL-7225: 4" Louver, DL-7226: Diffusion Lens, DL-7227: Linear Lens, DL-7228: Clear Lens DL-7229: Inner Baffle

dreamscape LIGHTING MFG., INC.

5521 W. Washington Blvd. • Los Angeles, CA 90016
Phone: 323-933-5760 • FAX: 323-933-3607
info@dreamscapelighting.com • www.dreamscapelighting.com

We reserve the right to change specifications without notice. ©2009 Dreamscape Lighting Mfg., Inc.

031009_DL7200